sferaco
VALVES & FITTINGS

REF. 580

BRASS BALL VALVE ACS PN30 BATIMENT +

Size :	DN 1/4" to 4"
Ends :	Male, Female BSP
Min Temperature :	- 10°C
Max Temperature :	+ 120°C
Max Pressure :	30 Bars (up to DN1")
Specifications :	Anti blow-out stem PTFE packing Full bore

Materials : Brass

Sferaco 90 rue du Ruisseau 38297 St Quentin Fallavier Tel: + 33 (0) 474.94.15.90 Fax: + 33 (0) 474.95.62.08 Internet: www.sferaco.fr E-mail : sferaco@sferaco.fr

Information provided as an indication and subject to possible modification

REF. 580

BRASS BALL VALVE ACS PN30 BATIMENT +

SPECIFICATIONS :

- Full bore
- Anti blow-out stem
- Solid ball
- PTFE packing
- Flat steel handle or aluminium butterfly handle
- Handle nut Dacromet coated (salt spray protection)
- Marking body " 80S " with ACS, fabrication date and logo
- ACS number on the handle
- Reversible handle

USE :

- Water distribution
- Min temperature Ts : - 10°C
- Max temperature Ts :+ 120°C
- Max pressure Ps : 30 bars up to DN 1" , 20 bars in 1"1/4 and 1"1/2 , 16 bars in 2" and 10 bars over

RANGE :

- Female / Female with blue flat steel handle **Ref. 508** 1/4" to 2"
- Female / Female with red flat steel handle **Ref. 580** 1/4" to 4"
- Female / Female with red butterfly handle **Ref. 586** 1/4" to 1"
- Female / Female with blue butterfly handle **Ref. 564** 1/4" to 1"
- Male / Female with blue flat steel handle **Ref. 511** 1/4" to 1"
- Male / Female with red flat steel handle **Ref. 581** 1/4" to 2"
- Male / Female with red butterfly handle **Ref. 587** 1/4" to 1"
- Male / Female with blue butterfly handle **Ref. 533** 1/4" to 1"
- Male / Male with blue flat steel handle **Ref. 529** 3/8" to 1"
- Male / Male with red flat steel handle **Ref. 582** 3/8" to 2"
- Male / Male with red butterfly handle **Ref. 588** 3/8" to 1"
- Male / Male with blue butterfly handle **Ref. 536** 3/8" to 1"
- Female / Female with drain 1/4" with red flat steel handle **Ref. 585** 1/2" to 2"
- Female / Female with drain 1/4" with red butterfly handle **Ref. 560** 1/2" to 1"
- Stem extension **Ref. 9812331 to 9812334** from 3/8" to 2"

PRESSURE / TEMPERATURE GRAPH (STEAM EXCLUDED) :

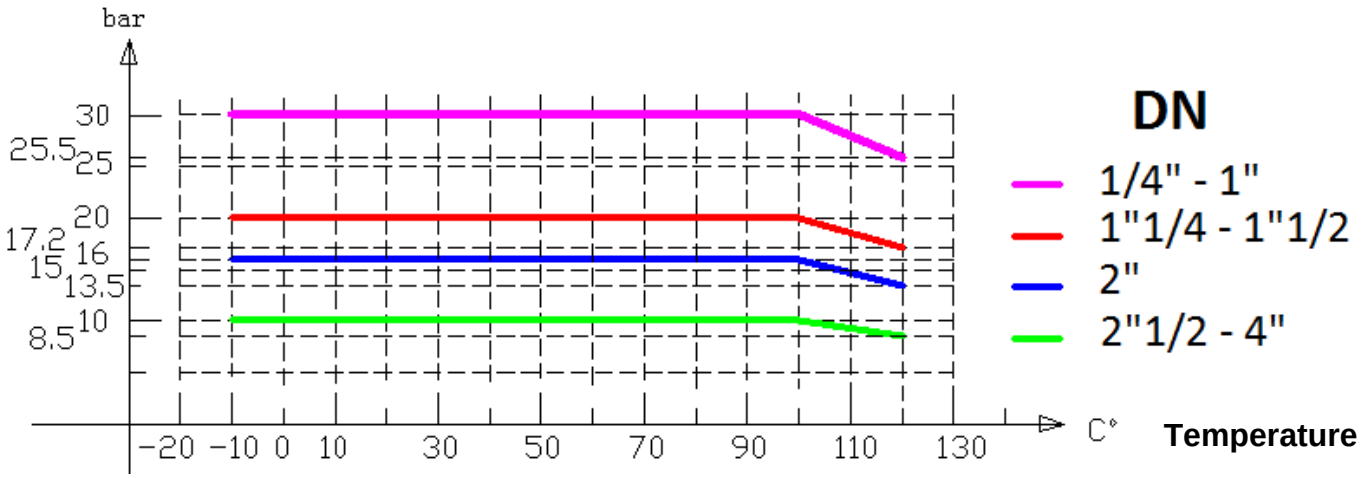

BRASS BALL VALVE ACS PN30 BATIMENT +

MATERIALS FEMALE – FEMALE TYPES :

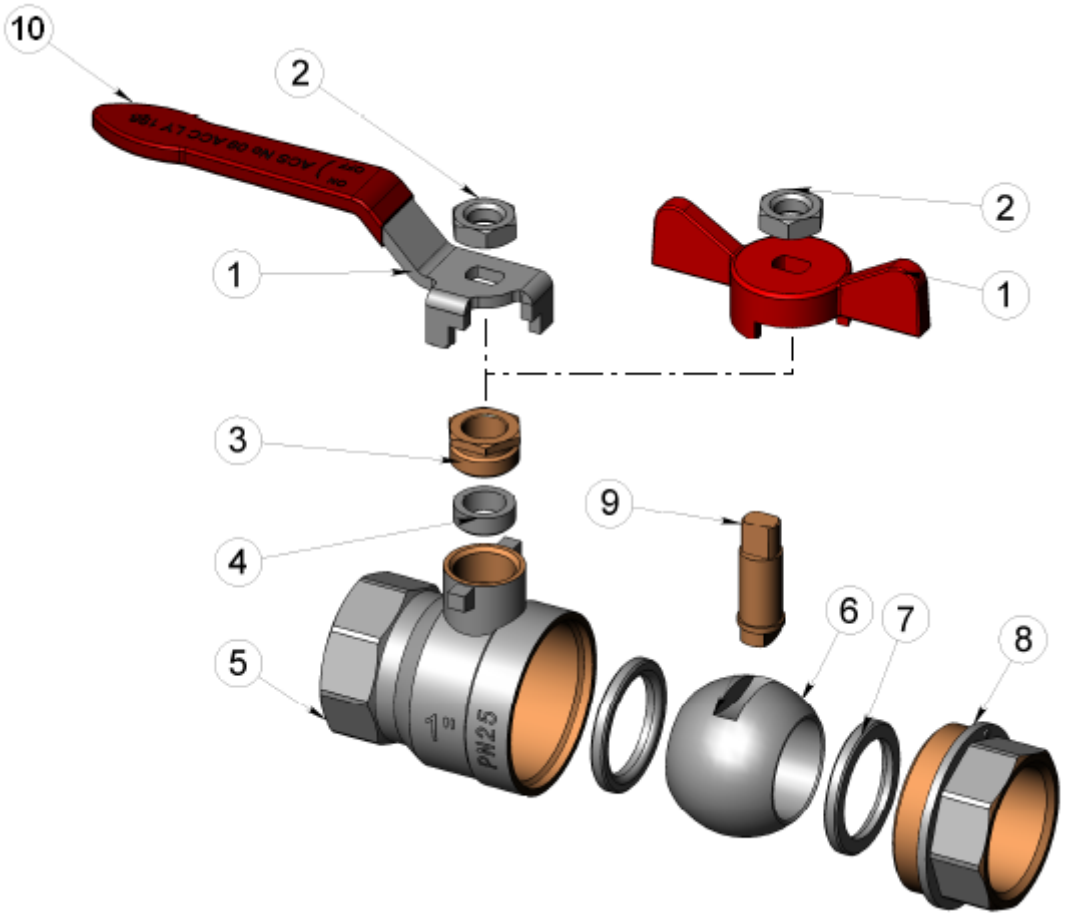

Item	Designation	Materials 508-580	Materials 564-586
1	Handle	Steel Q235	Aluminium
2	Handle nut	Steel Q235 Dacromet coated	
3	Packing nut	Brass CW 614 N according to EN 12165	
4	Packing	PTFE	
5	Body (external)	Brass CW 617 N according to EN 12165 nickeled	
5	Body (internal)	Brass CW 617 N according to EN 12165	
6	Ball	Brass CW 614 N according to EN 12165 chromed	
7	Seat	PTFE	
8	Bonnet (external)	Brass CW 617 N according to EN 12165 nickeled	
8	Bonnet (internal)	Brass CW 617 N according to EN 12165	
9	Stem	Brass CW 614 N according to EN 12165	
10	Handle cover	Plastic	-

Sferaco 90 rue du Ruisseau 38297 St Quentin Fallavier Tel: + 33 (0) 474.94.15.90 Fax: + 33 (0) 474.95.62.08 Internet: www.sferaco.fr E-mail : sferaco@sferaco.fr

Information provided as an indication and subject to possible modification

BRASS BALL VALVE ACS PN30 BATIMENT +

MATERIALS MALE – FEMALE TYPES :

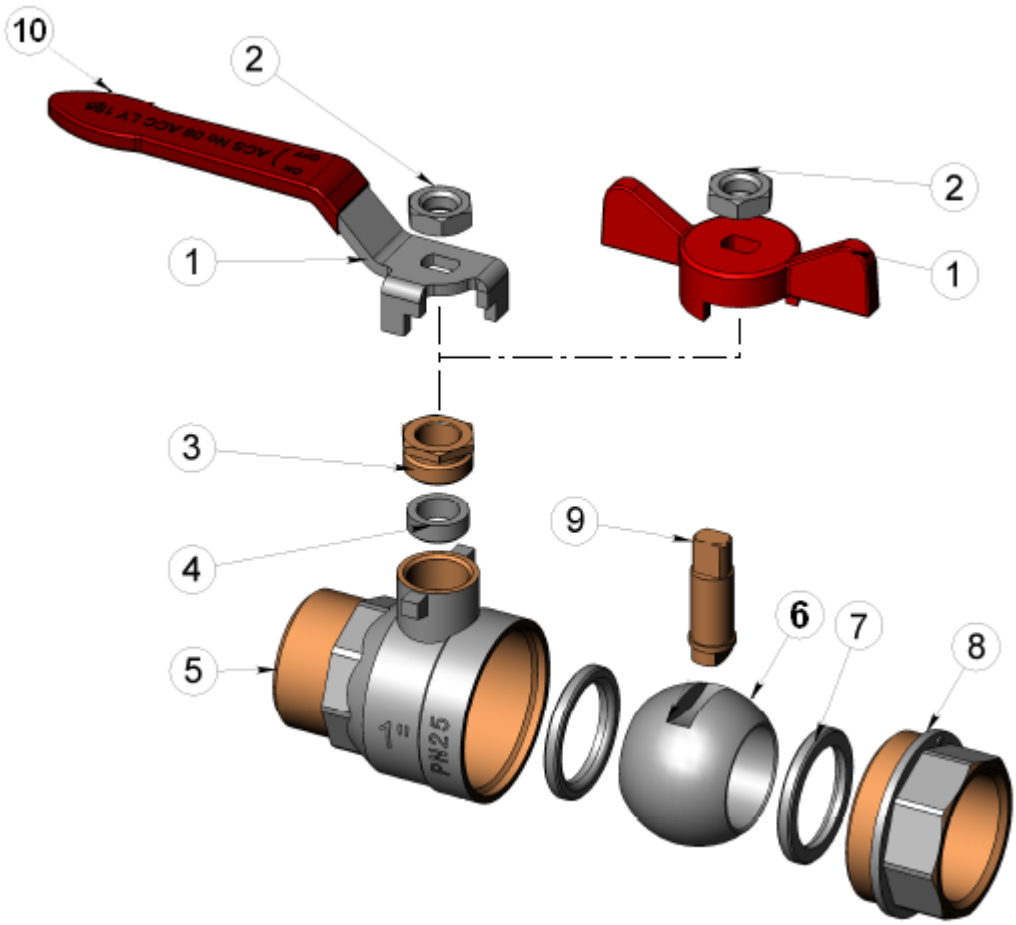

Item	Designation	Materials 511-581	Materials 533-587
1	Handle	Steel Q235	Aluminium
2	Handle nut	Steel Q235 Dacromet coated	
3	Packing nut	Brass CW 614 N according to EN 12165	
4	Packing	PTFE	
5	Body (external)	Brass CW 617 N according to EN 12165 nickeled	
5	Body (internal)	Brass CW 617 N according to EN 12165	
6	Ball	Brass CW 614 N according to EN 12165 chromed	
7	Seat	PTFE	
8	Bonnet (hexagonal)	Brass CW 617 N according to EN 12165 nickeled	
8	Bonnet	Brass CW 617 N according to EN 12165	
9	Stem	Brass CW 614 N according to EN 12165	
10	Handle cover	Plastic	-

Information provided as an indication and subject to possible modification

BRASS BALL VALVE ACS PN30 BATIMENT +

MATERIALS MALE – MALE TYPES :

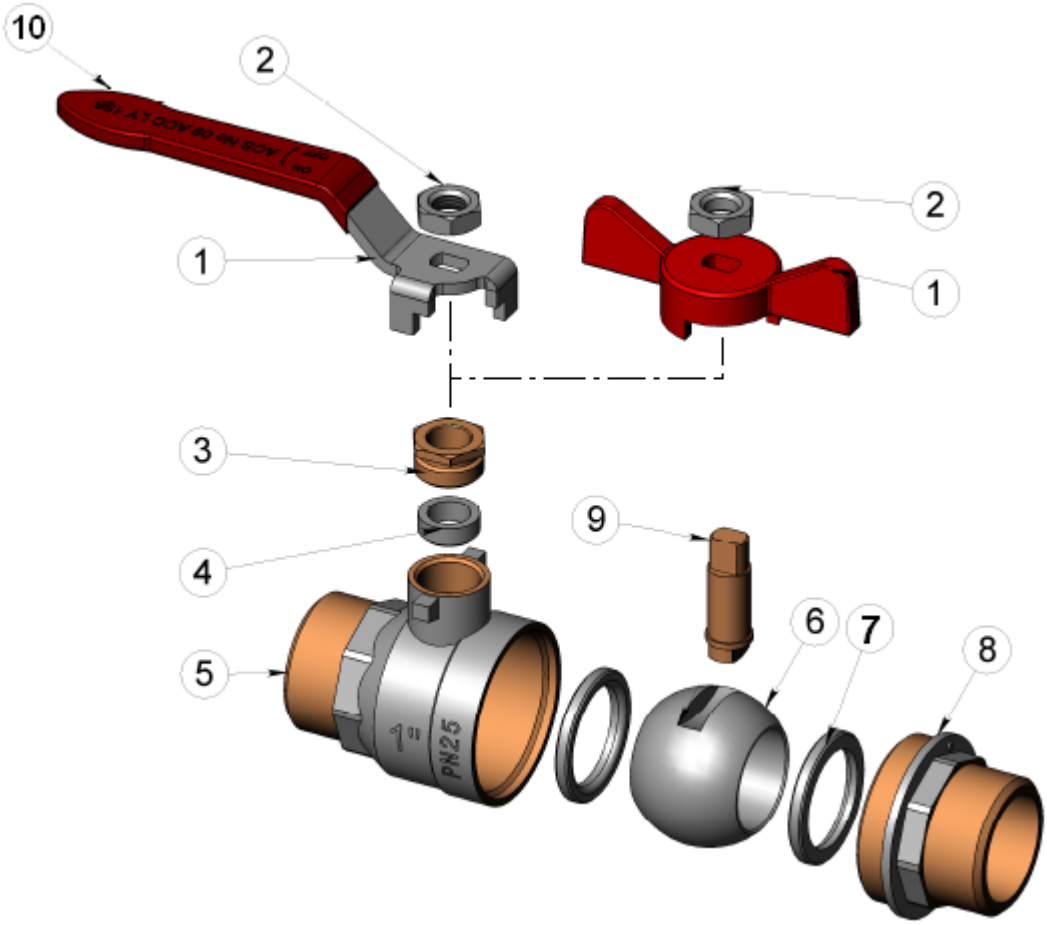

Item	Designation	Materials 529-582	Materials 536-588
1	Handle	Steel Q235	Aluminium
2	Handle nut	Steel Q235 Dacromet coated	
3	Packing nut	Brass CW 614 N according to EN 12165	
4	Packing	PTFE	
5	Body (external)	Brass CW 617 N according to EN 12165 nickeled	
5	Body (internal)	Brass CW 617 N according to EN 12165	
6	Ball	Brass CW 614 N according to EN 12165 chromed	
7	Seat	PTFE	
8	Bonnet (hexagonal)	Brass CW 617 N according to EN 12165 nickeled	
8	Bonnet	Brass CW 617 N according to EN 12165	
9	Stem	Brass CW 614 N according to EN 12165	
10	Handle cover	Plastic	-

Sferaco 90 rue du Ruisseau 38297 St Quentin Fallavier Tel: + 33 (0) 474.94.15.90 Fax: + 33 (0) 474.95.62.08 Internet: www.sferaco.fr E-mail : sferaco@sferaco.fr

Information provided as an indication and subject to possible modification

BRASS BALL VALVE ACS PN30 BATIMENT +

MATERIALS FEMALE – FEMALE WITH DRAINER TYPES :

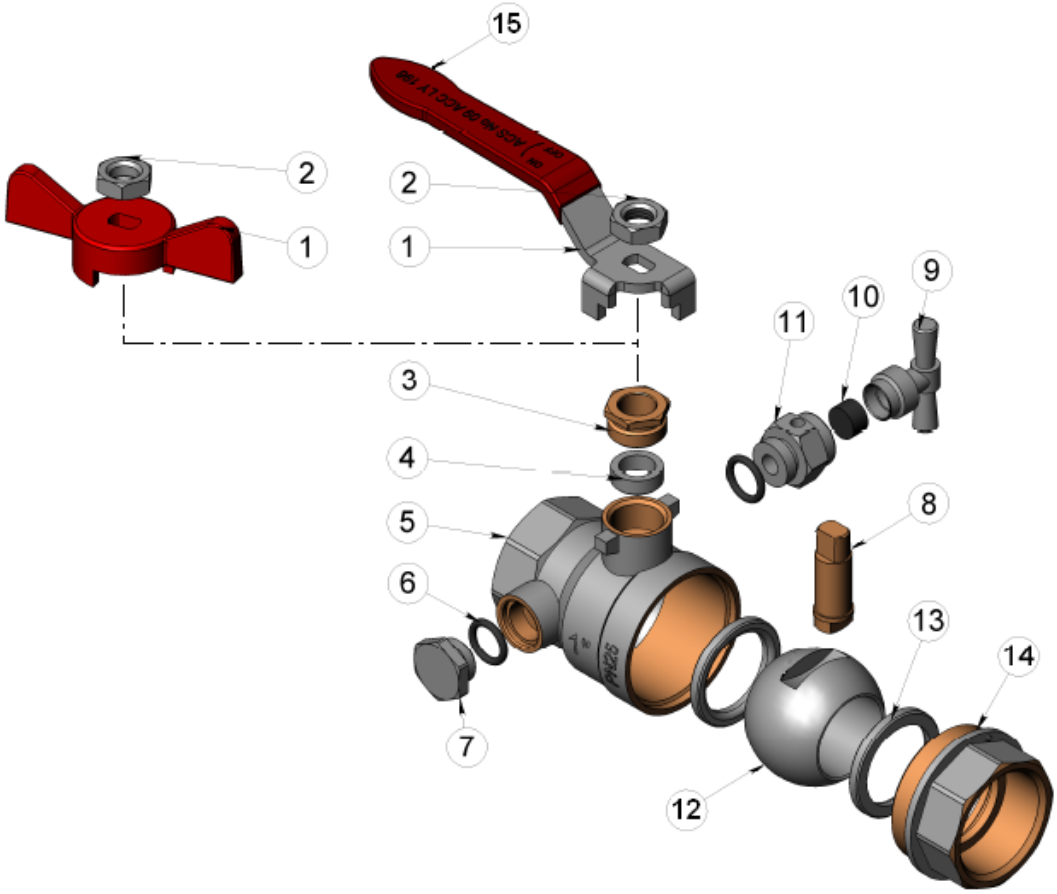

Item	Designation	Materials 585	Materials 560
1	Handle	Steel Q235	Aluminium
2	Handle nut	Steel Q235 Dacromet coated	
3	Packing nut	Brass CW 614 N according to EN 12165	
4	Packing	PTFE	
5	Body (external)	Brass CW 617 N according to EN 12165 nickeled	
5	Body (internal)	Brass CW 617 N according to EN 12165	
6	O ring	NBR	
7	Plug	Brass CW 617 N according to EN 12165 nickeled	
8	Stem	Brass CW 614 N according to EN 12165	
9	Screw	Brass CW 617 N according to EN 12165 nickeled	
10	Washer	NBR	
11	Manifold	Brass CW 617 N according to EN 12165 nickeled	
12	Ball	Brass CW 614 N according to EN 12165 chromed	
13	Seat	PTFE	
14	Bonnet (external)	Brass CW 617 N according to EN 12165 nickeled	
14	Bonnet (internal)	Brass CW 617 N according to EN 12165	
15	Handle cover	Plastic	-

Information provided as an indication and subject to possible modification

REF. 580

BRASS BALL VALVE ACS PN30 BATIMENT +

FEMALE / FEMALE SIZE (in mm) :

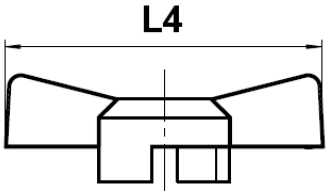

(564-586 types)

Stem size :

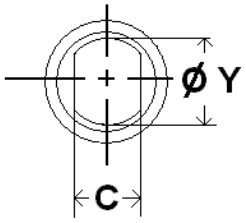

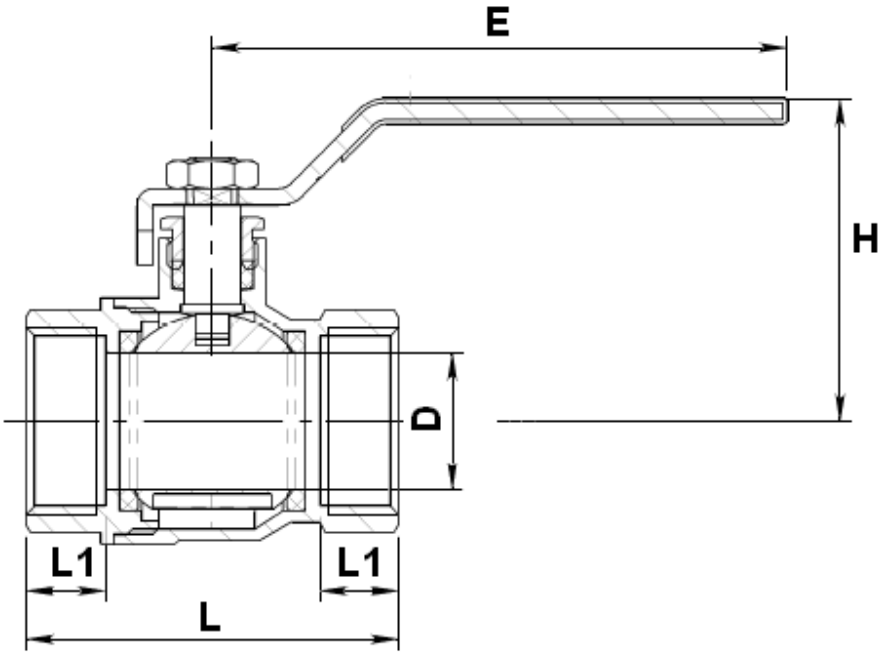

Ref.	DN	1/4"	3/8"	1/2"	3/4"	1"	1"1/4	1"1/2	2"	2"1/2	3"	4"
	Ø D	8	10	14.5	19	24.5	31	39.5	49.5	62	74	85
	L	44	44	49	56	66	76	87	103	132	148	168
	L1	11.5	11.5	12	13	14	15	16	18	24	26	28
508	L4	54	54	54	54	70						
564	E	81.5	81.5	81.5	104	102	120	120	142	236	236	240
580	H	41.8	41.8	45	48	57	67.5	73.5	87.5	110.5	119.5	129
586	C	4.8	4.8	4.8	4.8	5.8	7.8	7.8	7.8	11.8	11.8	11.8
	Ø Y	6	6	8	8	9	11.5	11.8	13	13.8	13.8	14
508/580	Weight (Kg)	0.134	0.124	0.176	0.252	0.384	0.572	0.840	1.364	2.49	3.19	4.905
564/586	Weight (Kg)	0.112	0.101	0.156	0.220	0.364						

Sferaco 90 rue du Ruisseau 38297 St Quentin Fallavier Tel: + 33 (0) 474.94.15.90 Fax: + 33 (0) 474.95.62.08 Internet: www.sferaco.fr E-mail : sferaco@sferaco.fr

Information provided as an indication and subject to possible modification

REF. 580

BRASS BALL VALVE ACS PN30 BATIMENT +

MALE / FEMALE SIZE (in mm) :

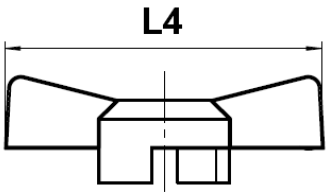

(533-587 types)

Stem size :

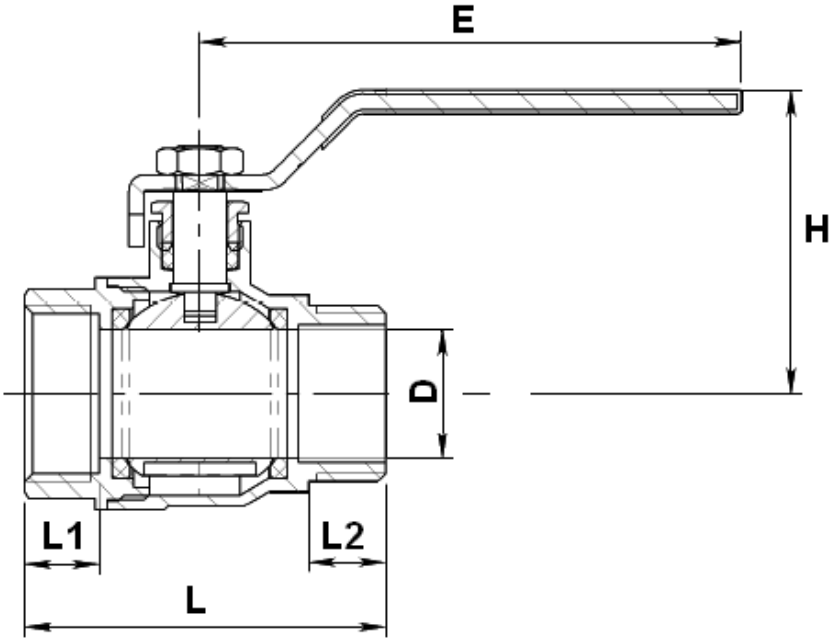

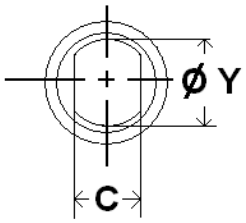

Ref.	DN	1/4"	3/8"	1/2"	3/4"	1"	1"1/4	1"1/2	2"
	Ø D	8	10	14.5	19	24.5	31	39.5	49.5
	L	45	45	52	60.5	68	81.5	95.5	112.5
	L1	11.5	11.5	12	13	14	15	16	18
511	L2	10	10	10	12	14	15	16	18
533	L4	54	54	54	54	70			
581	E	81.5	81.5	81.5	104	102	120	120	142
587	H	41.8	41.8	45	48	57	67.5	73.5	87.5
	C	4.8	4.8	4.8	4.8	5.8	7.8	7.8	7.8
	Ø Y	6	6	8	8	9	11.5	11.8	13
511-581	Weight (Kg)	0.125	0.124	0.182	0.254	0.380	0.590	0.855	1.410
533/587	Weight (Kg)	0.105	0.101	0.162	0.222	0.367			

Sferaco 90 rue du Ruisseau 38297 St Quentin Fallavier Tel: + 33 (0) 474.94.15.90 Fax: + 33 (0) 474.95.62.08 Internet: www.sferaco.fr E-mail : sferaco@sferaco.fr

Information provided as an indication and subject to possible modification

REF. 580

BRASS BALL VALVE ACS PN30 BATIMENT +

MALE / MALE SIZE (in mm) :

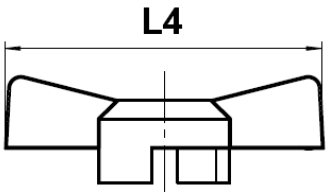

(536-588 types)

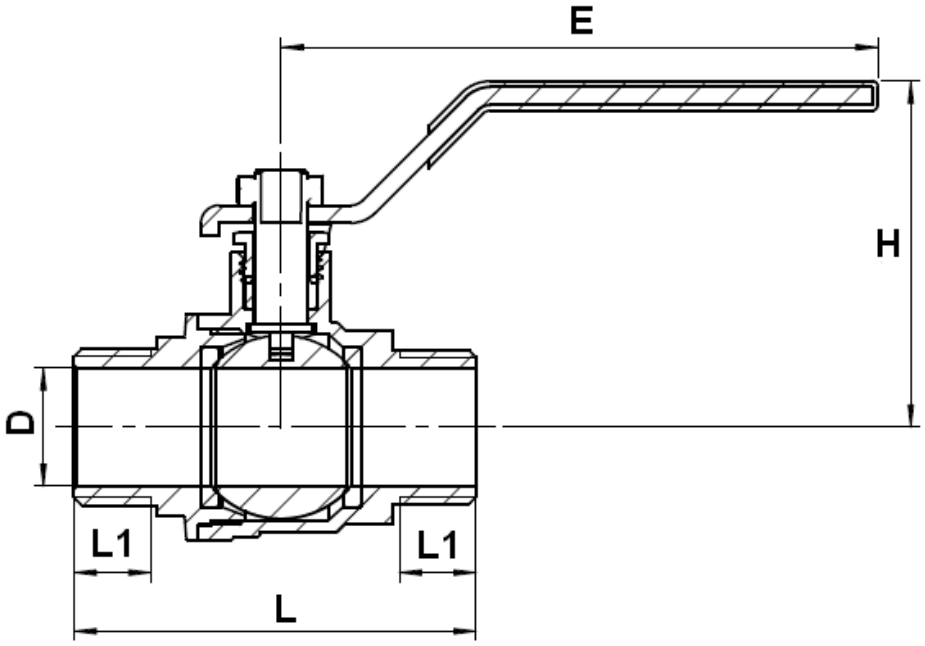

Stem size :

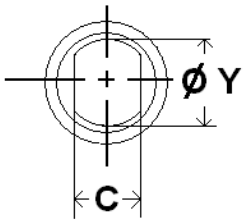

Ref.	DN	3/8"	1/2"	3/4"	1"	1"1/4	1"1/2	2"
	Ø D	10	14.5	19	24.5	31	39.5	49.5
	L	50.5	57	66.5	75	90.5	104	122.5
	L1	10	10	12	14	15	16	18
529	L4	54	54	54	70			
536	E	81.5	81.5	104	102	120	120	142
582	H	41.8	45	48	57	67.5	73.5	87.5
588	C	4.8	4.8	4.8	5.8	7.8	7.8	7.8
	Ø Y	6	8	8	9	11.5	11.8	13
529-582	Weight (Kg)	0.132	0.19	0.268	0.394	0.63	0.865	1.435
536-588	Weight (Kg)	0.113	0.168	0.24	0.37			

Sferaco 90 rue du Ruisseau 38297 St Quentin Fallavier Tel: + 33 (0) 474.94.15.90 Fax: + 33 (0) 474.95.62.08 Internet: www.sferaco.fr E-mail : sferaco@sferaco.fr

Information provided as an indication and subject to possible modification

REF. 580

BRASS BALL VALVE ACS PN30 BATIMENT +

FEMALE / FEMALE WITH DRAINER SIZE (in mm) :

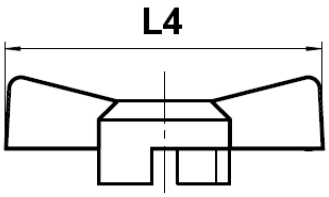

(560 type)

Stem size :

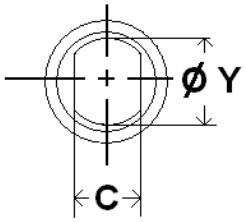

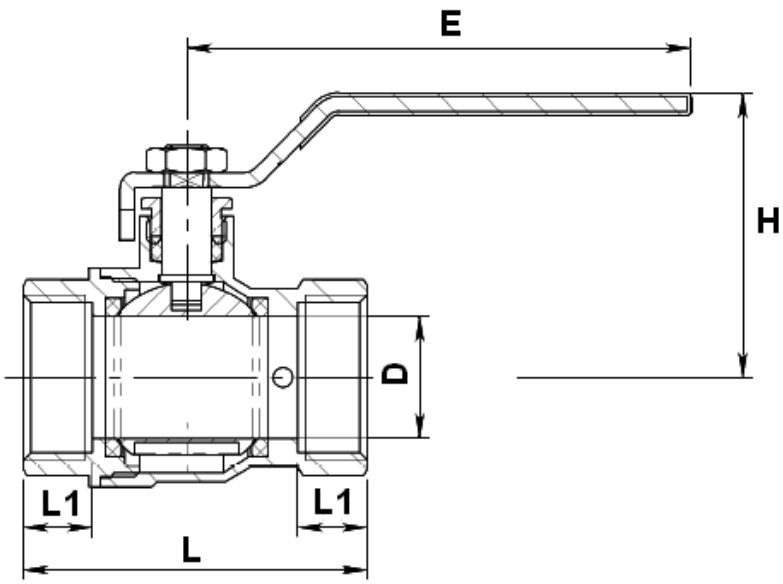

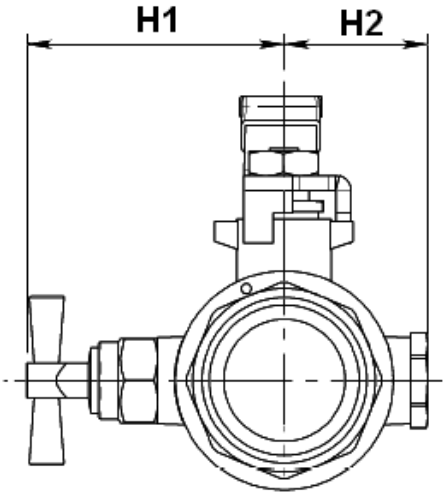

Ref.	DN	1/2"	3/4"	1"	1"1/4	1"1/2	2"
560	Ø D	14.5	19	24.5	31	39.5	49.5
	L	52.5	59.5	69.5	79.5	91	106.5
	L1	12	13	14	15	16	18
	E	81.5	104	102	120	120	142
	H	45	48	57	67.5	73.5	87.5
	H1	45.5	48.8	52	56.3	61.3	67
	H2	22.5	25.8	29	33.3	38.3	44
585	C	4.8	4.8	5.8	7.8	7.8	7.8
	Ø Y	8	8	9	11.5	11.8	13
585	Weight (Kg)	0.246	0.328	0.450	0.650	0.940	1.470
560	Weight (Kg)	0.224	0.293	0.426			

Sferaco 90 rue du Ruisseau 38297 St Quentin Fallavier Tel: + 33 (0) 474.94.15.90 Fax: + 33 (0) 474.95.62.08 Internet: www.sferaco.fr E-mail : sferaco@sferaco.fr

Information provided as an indication and subject to possible modification

BRASS BALL VALVE ACS PN30 BATIMENT +

STANDARDS :

- Fabrication according to ISO 9001 :2008
- DIRECTIVE 2014/68/EU : Products excluded from directive (Article 1, § 2.b)
- French water agreement **A.C.S. N° 14 ACC LY 469**
- Threaded male and female BSP cylindrical ends according to ISO 228-1

ADVICE : Our opinion and our advice are not guaranteed and SFERACO shall not be liable for the consequences of damages.
The customer must check the right choice of the products with the real service conditions.

BRASS BALL VALVE ACS PN30 BATIMENT +

INSTALLATION INSTRUCTIONS

GENERAL GUIDELINES :

- Ensure that the valves to be used are appropriate for the conditions of the installation (type of fluid,pressure and temperature).
- Be sure to have enough valves to be able to isolate the sections of piping as well as the appropriate equipment for maintenance and repair.
- Ensure that the valves to be installed are of correct strenght to be able to support the capacity of their usage.
- **Installation of all circuits should ensure that their function can be automatically tested on a regular basis (at least two times a year).**

INSTALLATION INSTRUCTIONS :

- **Before installing the valves,clean and remove any objects from the pipes** (in particular bits of sealing and metal) which could obstruct and block the valves.

- **Ensure that both connecting pipes either side of the valve (upstream and downstream) are aligned (if they're not,the valves may not work correctly).**

- **Make sure that the two sections of the pipe (upstream and downstream) match,the valve unit will not absorb any gaps.Any distortions in the pipes may affect the thightness of the connection,the working of the valve and can even cause a rupture.**To be sure,place the kit in position to ensure the assembling will work.

- Before starting the fitting,ensure that the threads and tapping are clean.

- **If sections of piping do not have their final support in place,they should be temporarily fixed.This is to avoid unnecessary strain on the valve.**

- The theoretical lengths given by ISO/R7 for the tapping are typically longer than required,the lenght of the thread should be limited, and **check that the end of the tube does not press right up to the head of the thread.**

- For the sealing assembly valve piping, it is essential to use products that are compatible with the requirements of the French water agreement ACS : **plumbers hemp proscribed**.
- Position the pipe clips on both sides of the valve.
- If mounting on an air conditioning with PER tubing and hoses,it is necessary to support the tubes and hoses with the fixing to avoid strain on the valve.
- When screwing the valve,ensure that you only rotate on screwed side by the 6 ended side.Use an open ended spanner or an adjustable spanner and not a monkey wrench.
- **Never use a vice to tighten the fixings of the valve.**
- Do not over tighten the valve.Do not block with any extensions as it may cause a rupture or weakening of the casing**.**

- **In general,for all valves used in buildings and heating,do not tighten above a torque of 30 Nm.**

The advice and assembly instructions above do not conform to any guarantee.
The information is given in general.It states what must not and must be done.
It is provided to ensure the safety of the personnel and the reliability of the valves.
The instructions in bold must be followed.

Sferaco 90 rue du Ruisseau 38297 St Quentin Fallavier Tel: + 33 (0) 474.94.15.90 Fax: + 33 (0) 474.95.62.08 Internet: www.sferaco.fr E-mail : sferaco@sferaco.fr

Information provided as an indication and subject to possible modification