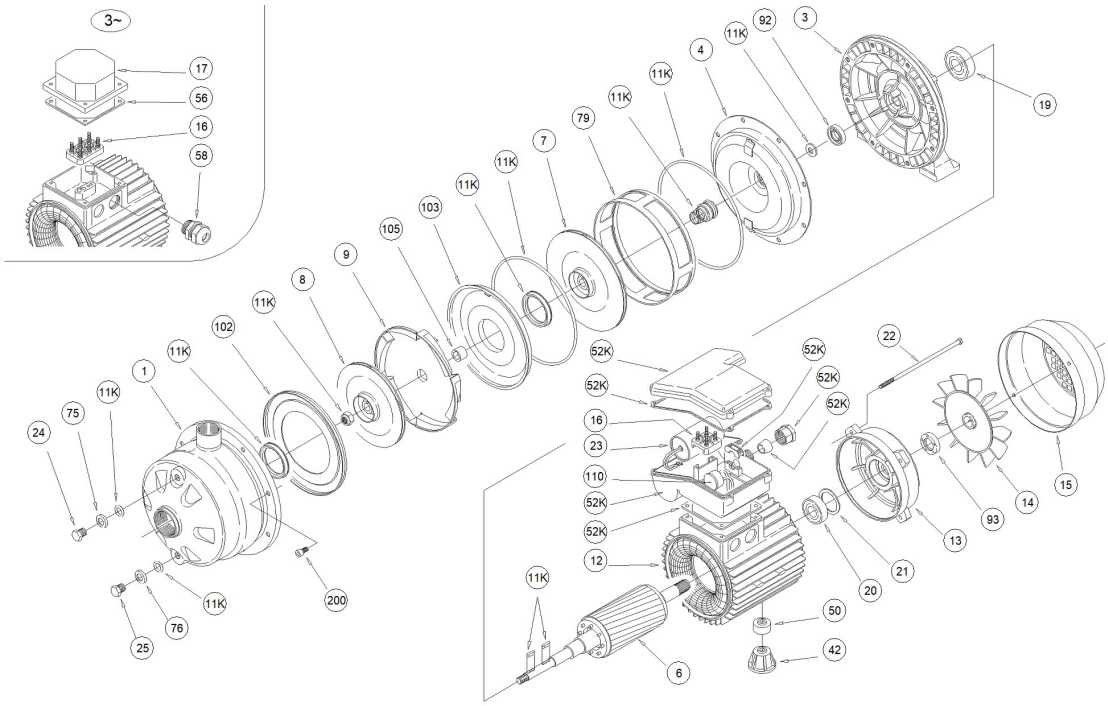1989304904-2CDXHS 120/30