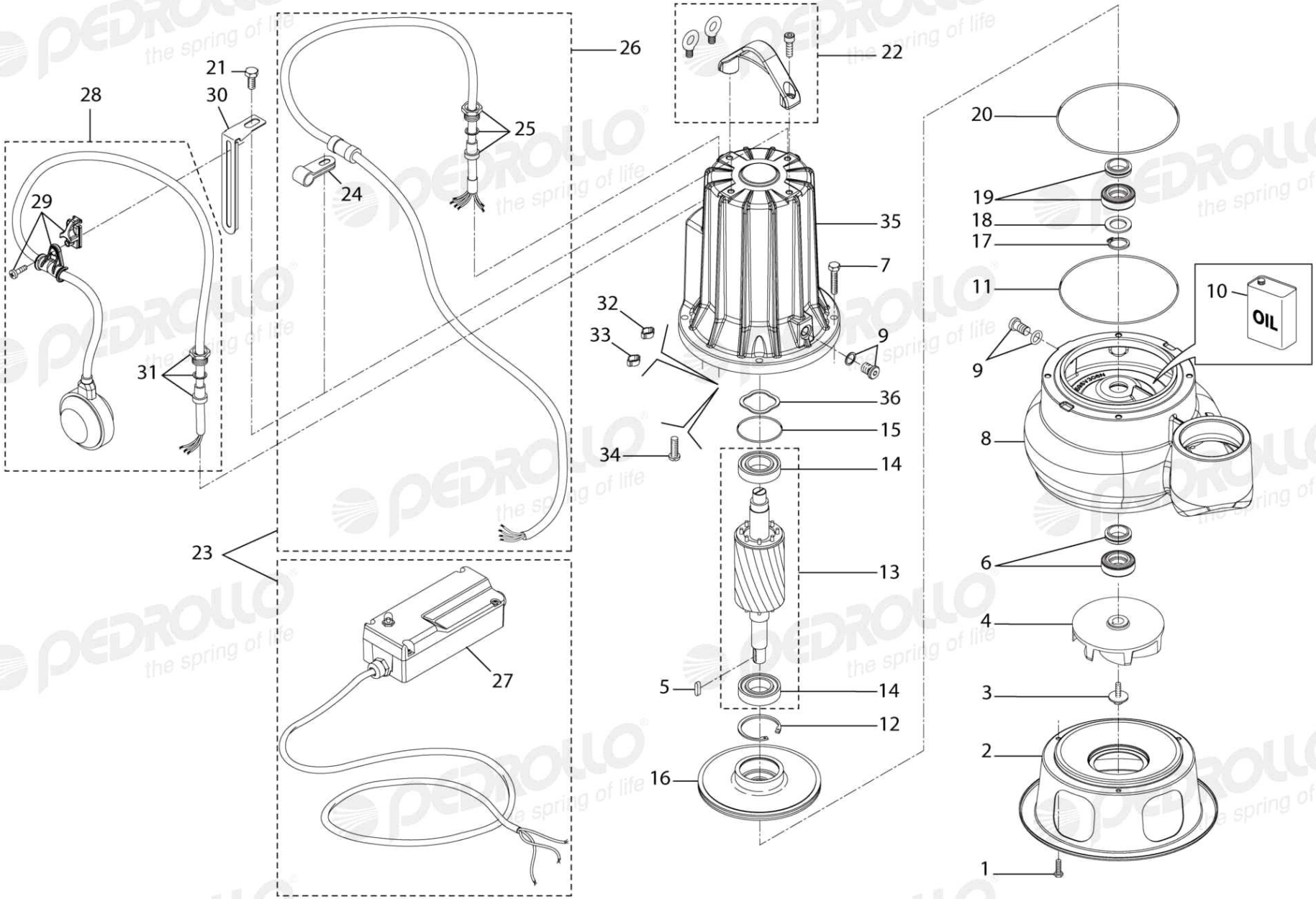
26
22
21
28
30
25
24
29
35
7
32
33
9
31
36
15
34
14
23
13
27
5
14
12
16
20
19
18
17
11
10
OIL
9
8
6
4
3
2
1