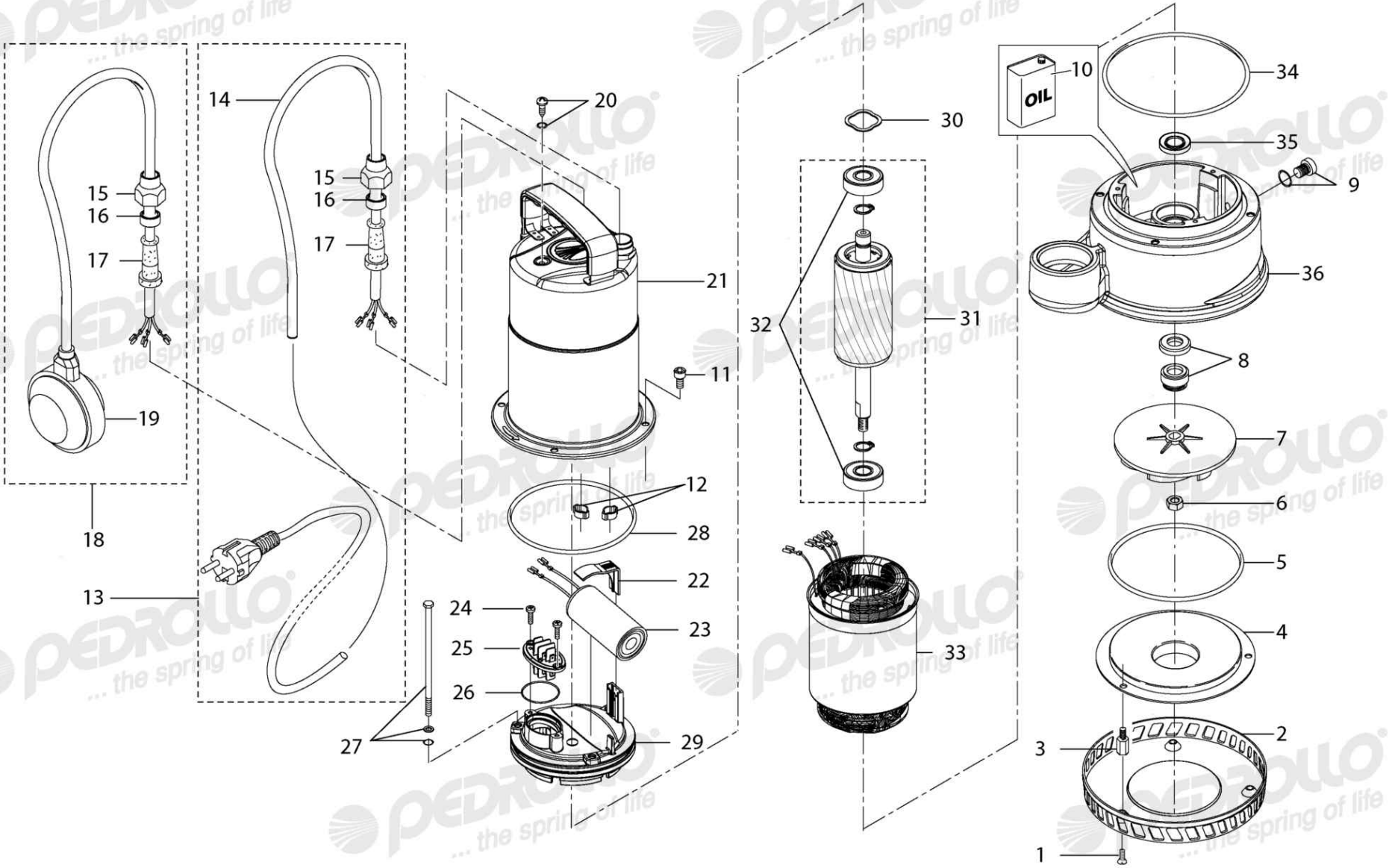


Release: B

**50Hz**

**ZDm 1A-E - 230V**