~ Steni ~

Contents / Inhalt / Contenu / Inhoud:

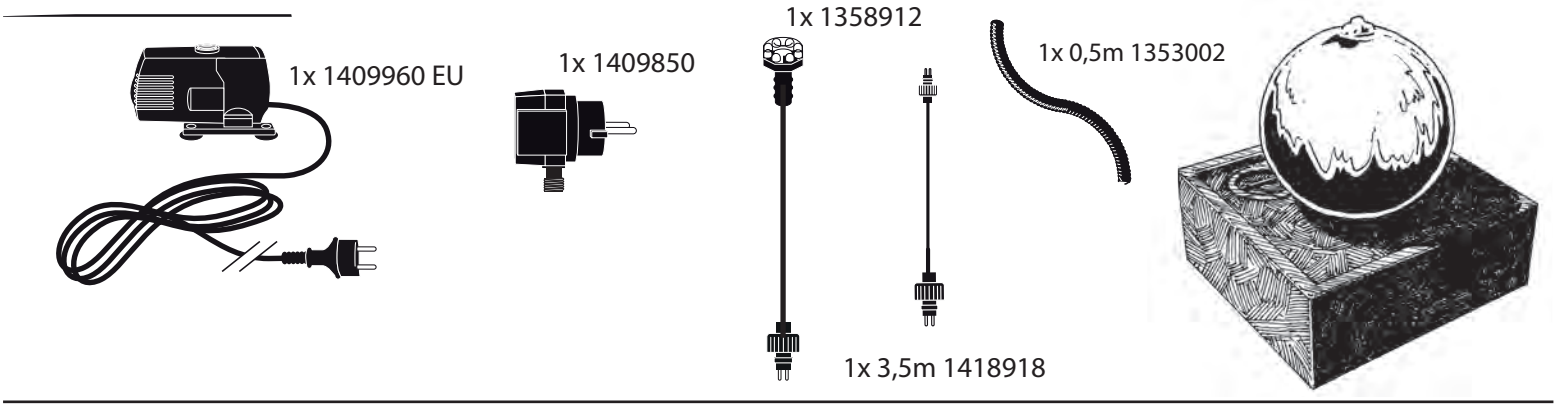

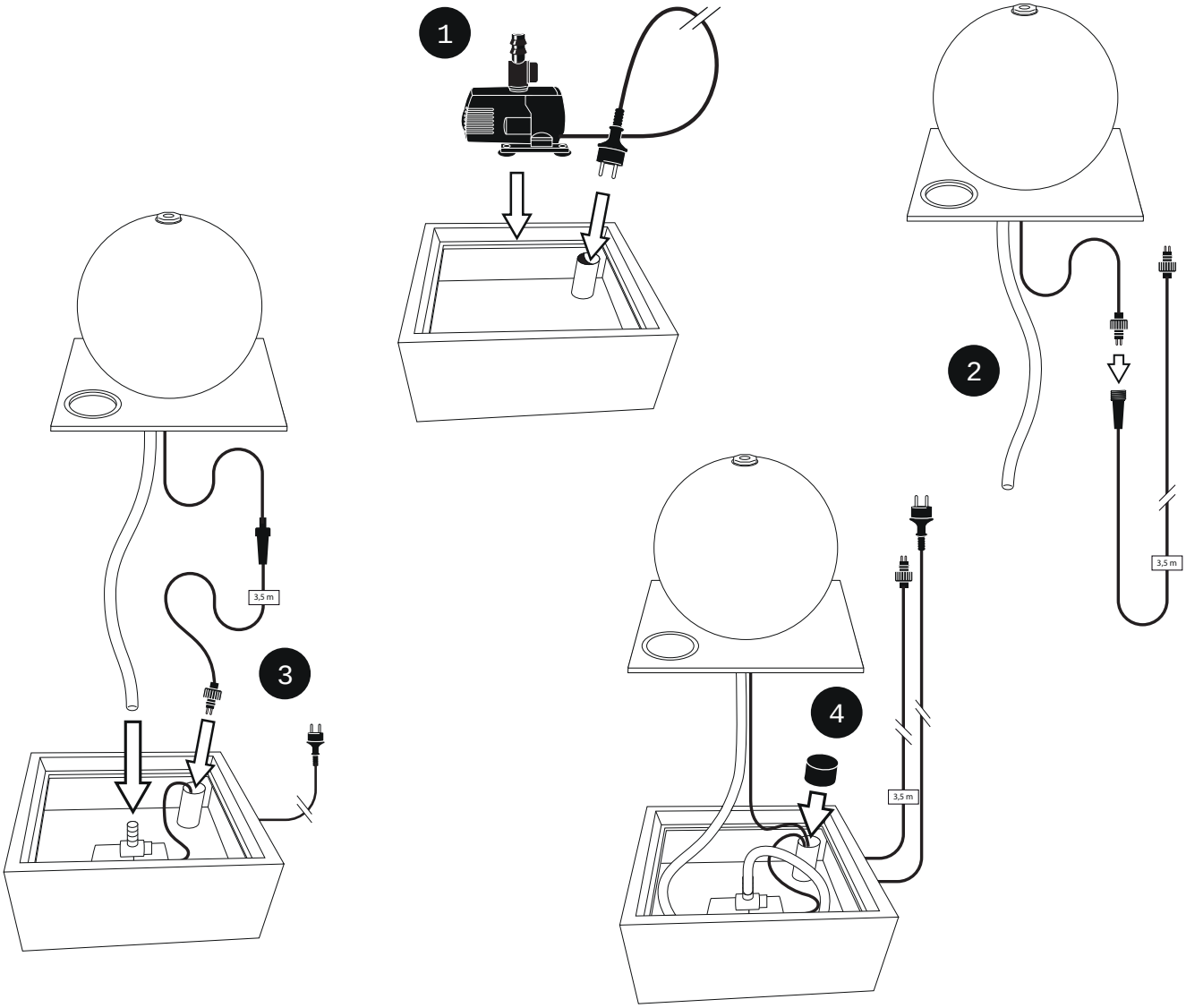

ubbink

www.ubbinkgarden.com

AcquaArte